LONG SEAMS	
COURSE	ORIENTATION
1(TOP)	180°
2	194°
3	180°
4	194°

*VERT – TOP TO BOTTOM

Ship loose items:
NONE

NOTE 7: X-RAY: FULL X-RAY PER CODE.

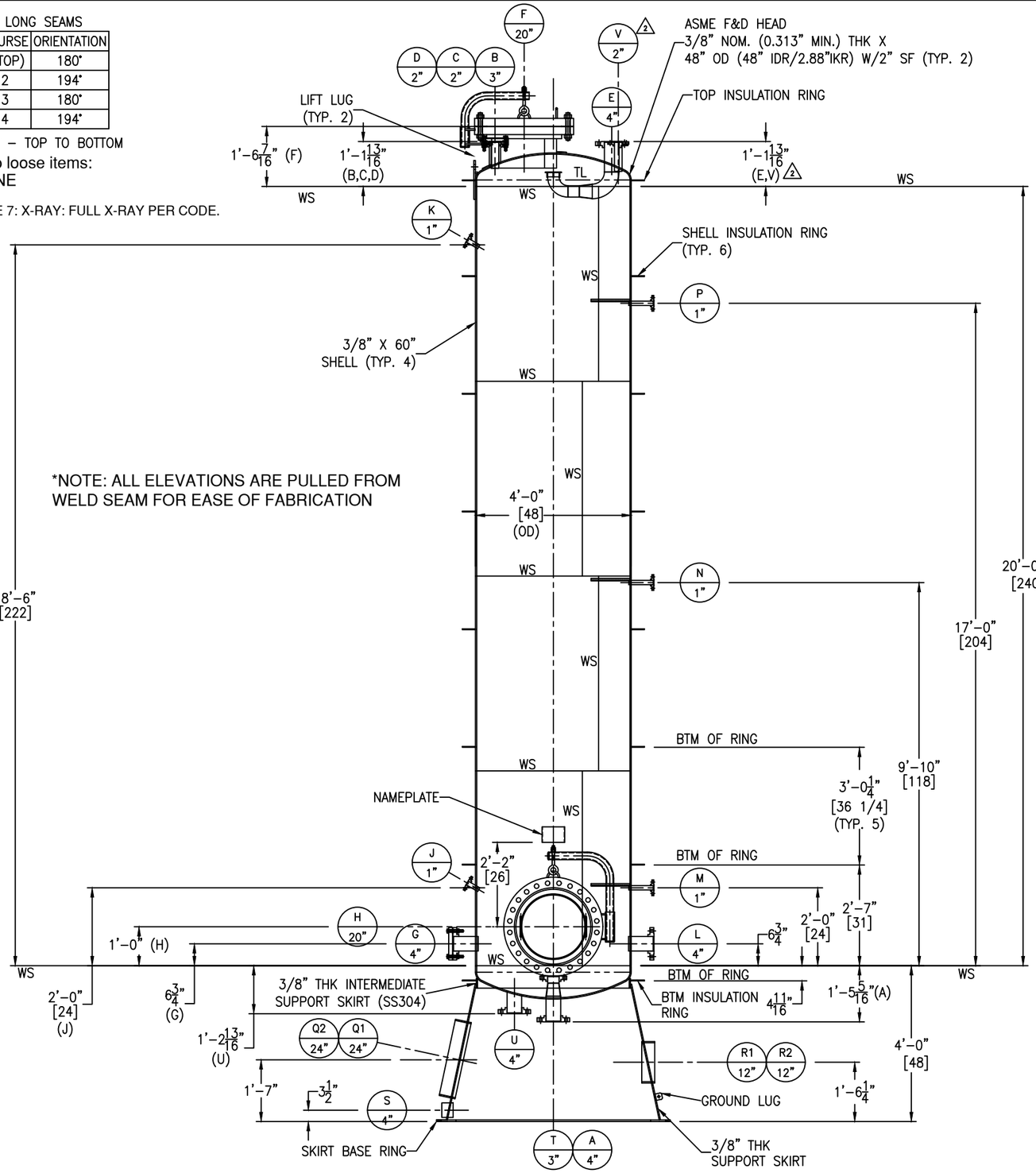

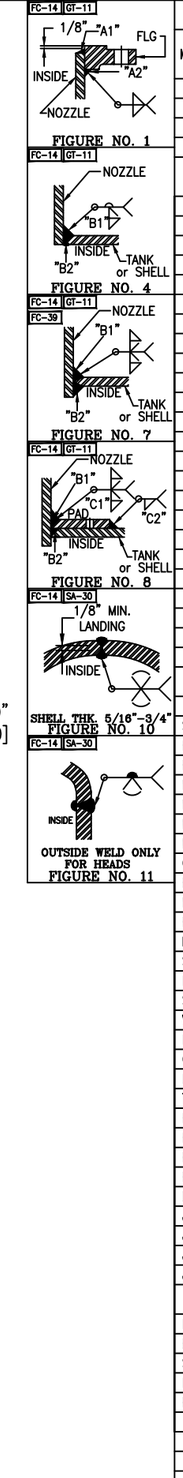

NOZZLE SCHEDULE

MARK	SERVICE	SIZE	RATING	TYPE / STYLE	NECK SCHED.	PROJECTION EXT. (E)	PROJECTION INT. (MIN.)	WELD FIGURE	REPAD SIZE (WIDTH X THK.)	WELD SIZE "A1"	"A2"	"B1"	"B2"	"C1"	"C2"
A	DRAIN	4"	300#	RFSO W/REDUCER	40S	SEE DWG	SEE DWG	1,7	–	1/4	3/8	1/4	1/8	–	–
B	VENT/SPARE	3"	300#	RFSO W/BLIND	40S	SEE DWG	–	1,4	–	1/4	5/16	1/4	1/8	–	–
C	WATER OUT	2"	300#	RFSO	40S	SEE DWG	–	1,4	–	3/16	1/4	3/16	1/8	–	–
D	CARBON	2"	300#	RFSO	40S	SEE DWG	3/8"	1,7	–	3/16	1/4	3/16	1/8	–	–
E	STEAM	4"	300#	RFSO W/ELBOW & REDUCER	40S	SEE DWG	SEE DWG	1,7	–	1/4	3/8	1/4	1/8	–	–
F	ROOF MANWAY	20"	300#	RFSO W/DAVIT	3/8"	SEE DWG	3/8"	1,8	3" X 3/8"	1/4	9/16	3/8	1/8	3/8	5/16
G	SPARE	4"	300#	RFSO W/BLIND	40S	7"	3/8"	1,7	–	1/4	3/8	1/4	1/8	–	–
H	SHELL MANWAY	20"	300#	RFSO W/DAVIT	3/8"	7"	3/8"	1,8	2" X 3/8"	1/4	9/16	3/8	1/8	3/8	5/16
J	P1	1"	300#	RFSO	40S	3"	3/8"	1,7	–	3/16	3/16	3/16	1/8	–	–
K	P2	1"	300#	RFSO	40S	3"	3/8"	1,7	–	3/16	3/16	3/16	1/8	–	–
L	NITROGEN	4"	300#	RFSO	40S	7"	3/8"	1,7	–	1/4	3/8	1/4	1/8	–	–
M	T.E	1"	300#	RFSO	40S	7"	3/8"	1,7	–	3/16	3/16	3/16	1/8	–	–
N	T.E	1"	300#	RFSO	40S	7"	3/8"	1,7	–	3/16	3/16	3/16	1/8	–	–
P	T.E	1"	300#	RFSO	40S	7"	3/8"	1,7	–	3/16	3/16	3/16	1/8	–	–
Q1	SKIRT ACCESS	24"	–	–	3/8"	3 3/4"	1"	7	–	–	–	1/4	1/8	–	–
Q2	SKIRT ACCESS	24"	–	–	3/8"	3 3/4"	1"	7	–	–	–	1/4	1/8	–	–
R1	PIPE SLEEVE	12"	–	PIPE	STD	2"	1/4"	7	–	–	–	1/4	1/8	–	–
R2	PIPE SLEEVE	12"	–	PIPE	STD	2"	1/4"	7	–	–	–	1/4	1/8	–	–
S	PIPE SLEEVE (DRAIN)	4"	–	PIPE	40	2"	9/16"	7	–	–	–	1/4	1/8	–	–
T	DIFFUSER SCREEN	3"	300#	RFSO	40S	SEE DWG	SEE DWG	1	–	1/4	5/16	–	–	–	–
U	CLEAN OUT	4"	300#	RFSO	40S	SEE DWG	–	1,4	–	1/4	3/8	1/4	1/8	–	–
V	–	2"	300#	RFSO	40S	SEE DWG	3/8"	1,7	–	3/16	1/4	3/16	1/8	–	–

MATERIALS OF CONSTRUCTION

	VESSEL
SHELL	SA240-316/316L
HEADS	SA240-316/316L
RIM ANGLE	–
NOZZLE NECKS	SA312-316/316L WLD & SA403-316/316L WPW
NOZZLE FLANGES	SA182F-316/316L
MANWAY NECKS	SA240-316/316L
MANWAY FLANGES	SA182F-316/316L
GASKETS	GARLOCK 3000
BOLTS/STUDS	SA193-B7 (ZINC PLATED)
NUTS	SA194-2H (ZINC PALTED)
REPADS	SA240-304/304L
INTERMEDIATE SUPPORT SKIRT	SA240-304/304L
SUPPORT SKIRT	SA36
INTERNALS	SA479-316/316L & SA240-316/316L
SKIRT OPENINGS	SA36 & SA53B-ERW
VACUUM RINGS	–
INSULATION RINGS	SA240-304/304L
GROUND LUG	SA240-304/304L
LADDER	–
TANK CLIPS (LADDER)	–
HANDRAIL	–
HANDRAIL CLIPS	–
PLATFORM	–
PLATFORM CLIPS	–
DIPTUBE SUPPORT	–
JACKET SHELL	–
JACKET HEADS	–
JACKET NOZZLE NECKS	–
JACKET NOZZLE FLANGES	–

DESIGN DATA

	VESSEL
DESIGN AND FAB. CODE	ASME
CERT. STAMP REQ'D.	YES
DESIGN PRESSURE	75 PSIG
DESIGN TEMPERATURE	1000° F
MIN. DESIGN METAL TEMP.	-20° F @ 75 PSIG
OPERATING PRESSURE	60 PSIG
OPERATING TEMPERATURE	–
JOINT EFFICIENCY HEADS	1.0
JOINT EFFICIENCY SHELL	1.0
CORROSION ALLOWANCE	0"
SPECIFIC GRAVITY	1.0
EARTHQUAKE ZONE	Ss = (0.160) S1 = (0.063)
WIND LOAD	125 MPH
STRESS RELIEF	NOT REQ'D
RADIOGRAPHIC EXAM	FULL (SEE NOTE 7)
DYE PENETRANT EXAM	NOT REQ'D
MAGNETIC PARTICLE EXAM	NOT REQ'D
HYDROSTATIC TEST	NOT REQ'D
PNEUMATIC TEST	108 PSIG / GAUGE #9
JKT DESIGN AND FAB. CODE	–
JKT CERT. STAMP REQ'D.	–
JKT DESIGN PRESSURE	–
JKT DESIGN TEMPERATURE	–
JKT MIN. DESIGN METAL TEMP.	–
JKT OPERATING PRESSURE	–
JKT OPERATING TEMPERATURE	–
JKT JOINT EFFICIENCY HEADS	–
JKT JOINT EFFICIENCY SHELL	–
JKT HYDRO TEST	–

VESSEL FINISH

INTERIOR WELD TREATMENT:	SAV TANK STANDARD
EXTERIOR WELD TREATMENT:	SAV TANK STANDARD
SAV TANK FINISHING STANDARD:	SEE NOTE 6
INSULATION:	4" BY OTHERS
PAINTING:	SEE NOTE 8

VESSEL CAPACITY AND WEIGHTS

OPERATING CAPACITY	–
FULL CAPACITY	1,900 GAL.
EMPTY SHIPPING WEIGHT	9,200 LBS.
WEIGHT FULL OF WATER	25,200 LBS.
WEIGHT FULL OF PRODUCT	25,200 LBS.

ASME SECT. VIII, DIV. 1
2023 EDITION

ENG. _____ DATE: _____

Q.C. _____ DATE: _____

A.I. _____ DATE: _____

This drawing is issued for customer approval. please review, make approval changes (if any) in red. check the appropriate box, sign & date.

- ☐ Approval – no changes. Please proceed with fabrication.
- ☐ Approved as noted. Please proceed with fabrication
- ☐ Not approved. Please make changes and resubmit.

Customer signature _____ Date _____

GENERAL NOTES

1.) COVER ALL FLANGES, OPENINGS & MACHINED SURFACES PRIOR TO SHIPMENT UNLESS OTHERWISE NOTED.
2.) BOLT HOLES TO STRADDLE 0° & 180° UNLESS OTHERWISE NOTED.
3.) REPADS TO HAVE (1) ø1/4" NPT TELL-TALE HOLES FOR PNEUMATIC TESTING AT 2 PSIG FOR PRESSURE RETAINING PARTS. ALL OTHER REPADS TO HAVE (1) ø1/4" WEEP HOLE AT LOWEST POINT ON PAD.
4.) ASME CODE VESSELS TO BE IN ACCORDANCE WITH UG-80 & UG-81. TOLERANCES: +/- 1/8" FOR DIMENSIONS AND +/- 2 DEGREES FOR ORIENTATIONS.
5.) ASME MATERIALS TO CONFORM TO THE FOLLOWING: FLANGES – B16.5, FITTINGS – B16.9 & COUPLINGS – B16.11.
6.) PICKLE ALL EXTERIOR WELDS. PASSIVATE INTERIOR & EXTERIOR OF VESSEL. (EXCLUDING SKIRT, BASE RING AND SKIRT OPENINGS)
7.) X-RAY: FULL X-RAY PER CODE.
8.) PAINTING – SANDBLAST SP6. (1) COAT MACROPOXY 646 @ 3-4 MILS DFT. (SA36 SKIRT, SKIRT OPENINGS AND BASE PLATE ONLY)

REVISIONS

REV	D.BY	C.BY	DATE	DESCRIPTION
				AS BUILT
				CERTIFIED
2	AD	RS	10/25/25	APPROVAL REV 2
1	AD	NP	10/10/25	APPROVAL REV 1
0	AD	RS	09/22/25	APPROVAL

Savannah Tank & Equipment Corp.
1517 Telfair Road, Savannah, GA 31415
(912) 233-8902

DRAWN BY: AD
CHK'D BY: RS
APPROVED BY: NP
SCALE: 1/2" = 1'-0"

SYMRISE INC.
CARBON UNIT #1
EQUIP. #
CUST. PO #175/4501777859

DRAWING NO.: 092-25-1 SHT 1 OF 6 REV. SET 2

SUPPORT SKIRT OPENINGS SHOWN SEPARATELY FOR CLARITY PURPOSE

LONG SEAMS

COURSE	ORIENTATION
1(TOP)	180°
2	194°
3	180°
4	194°

*VERT – TOP TO BOTTOM

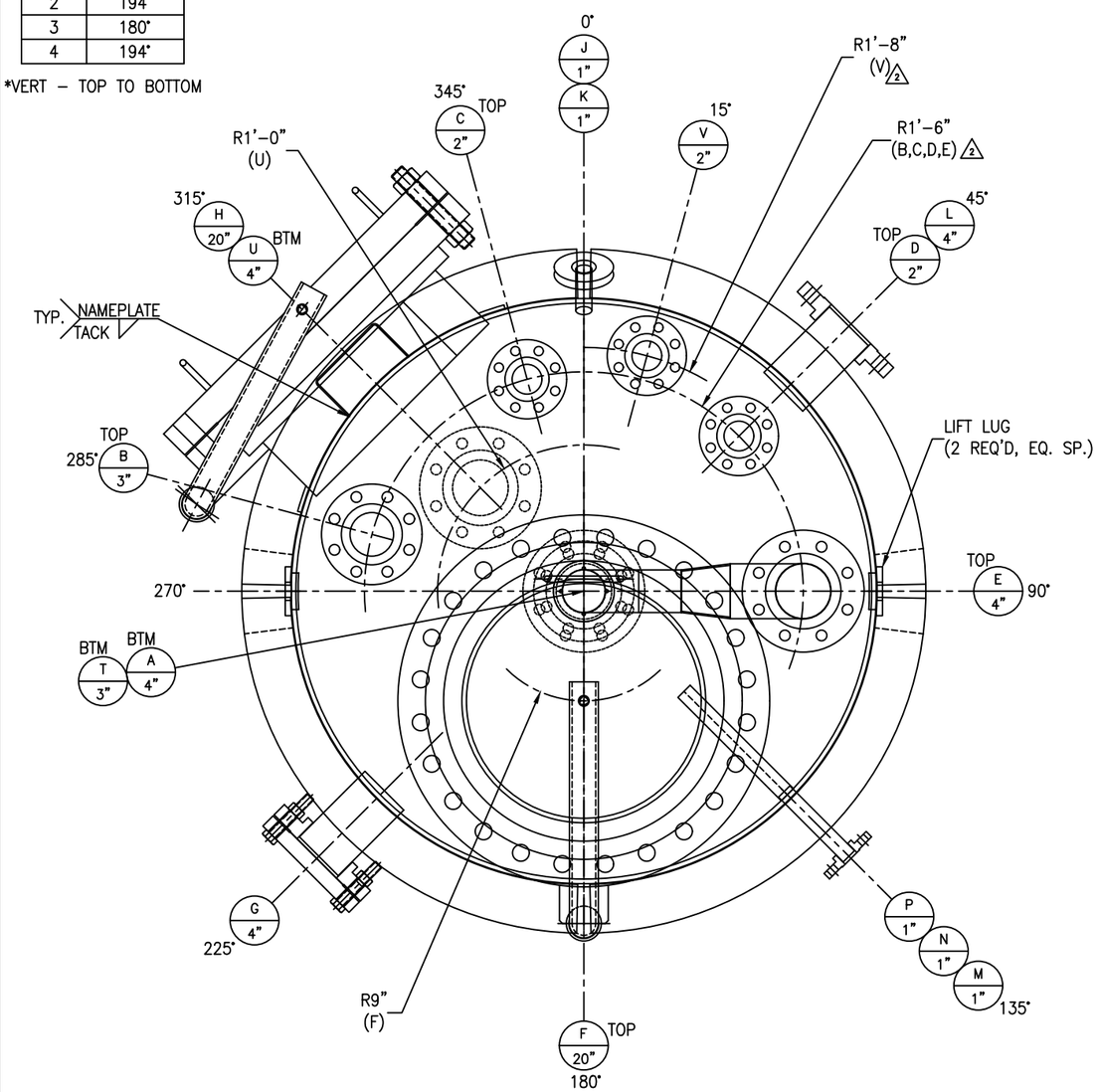

PLAN VIEW

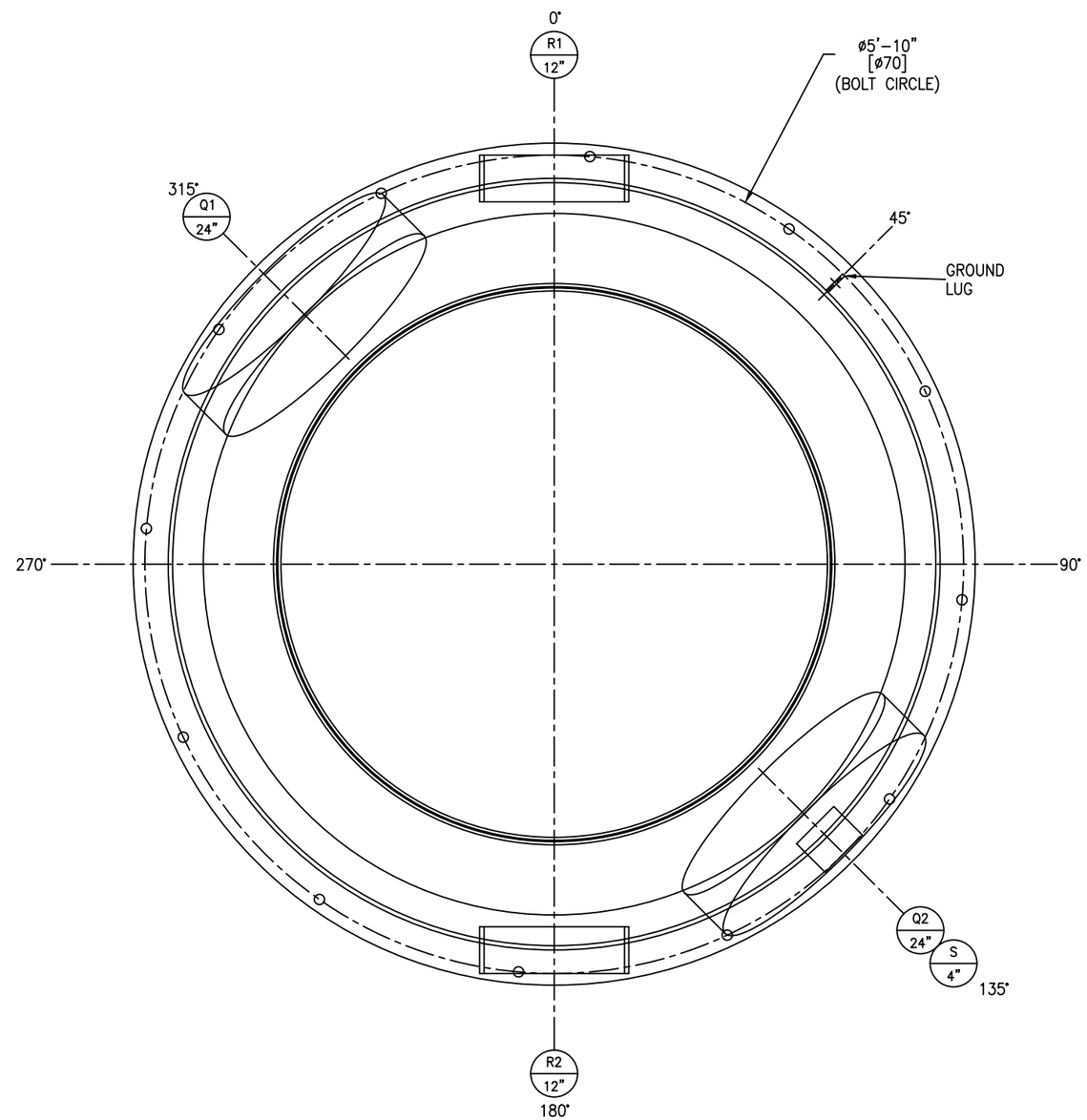

SUPPORT SKIRT

REV	D.BY	C.BY	DATE	DESCRIPTION
				AS BUILT
				CERTIFIED
2	AD	RS	10/25/25	APPROVAL REV 2
1	AD	NP	10/10/25	APPROVAL REV 1
0	AD	RS	09/22/25	APPROVAL

⚠1 REVISIONS

Savannah Tank & Equipment Corp.
1517 Telfair Road, Savannah, GA 31415
(912) 233–8902

DRAWN BY: AD
CHK'D BY: RS
APPROVED BY: NP
SCALE: 1 1/2" = 1'–0"

SYMRISE INC.
CARBON UNIT #1
EQUIP. #
CUST. PO #175/4501777859

DRAWING NO.: 092–25–2 SHT 2 OF 6 REV. SET 2

FC-38 FC-39 FC-14

LONG SEAMS

COURSE	ORIENTATION
INTERMEDIATE SKIRT	90°
SUPPORT SKIRT	270°

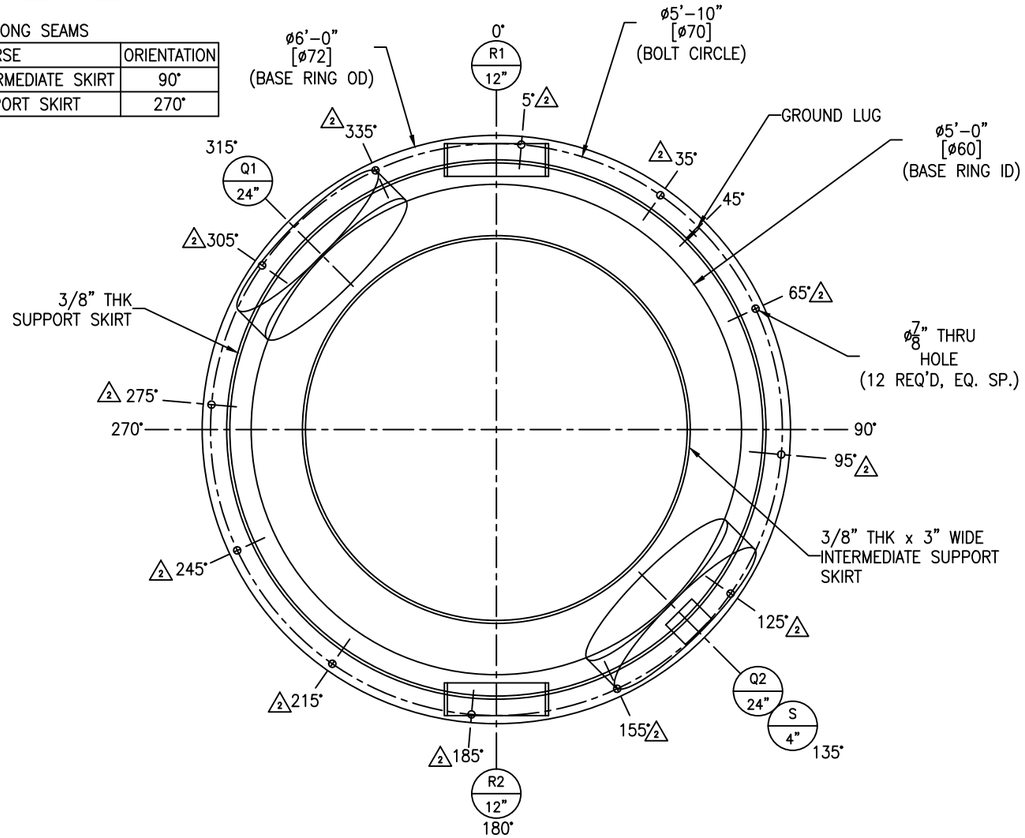

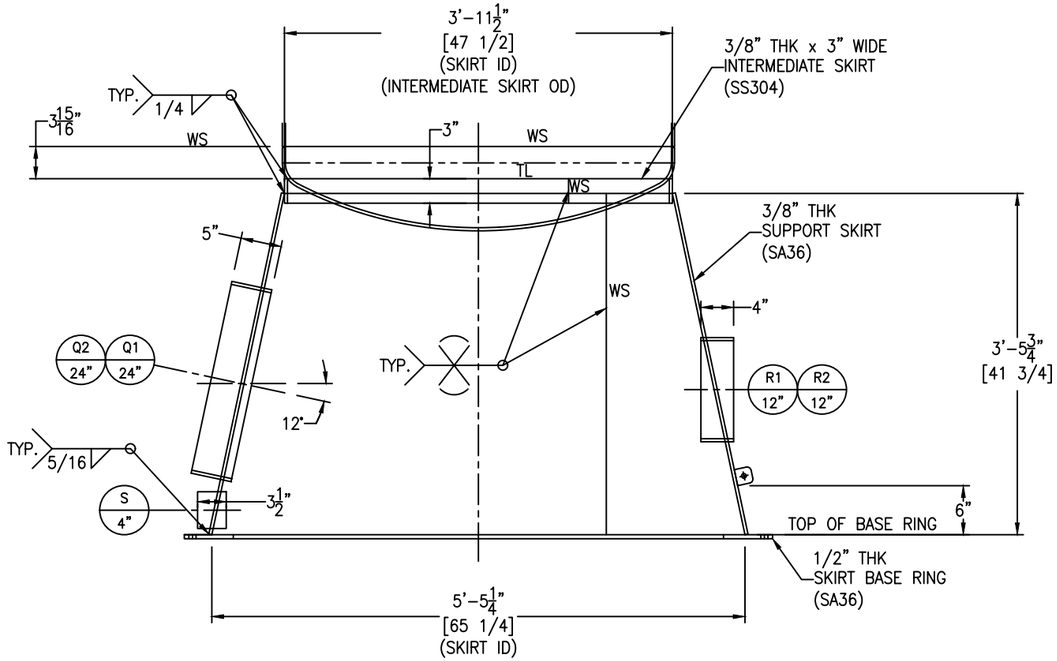

***SEE SHT #1 FOR OPENINGS AND PIPE SLEEVE ELEVATIONS

SUPPORT SKIRT DETAIL

SCALE: 1" = 1'-0"

FC-39

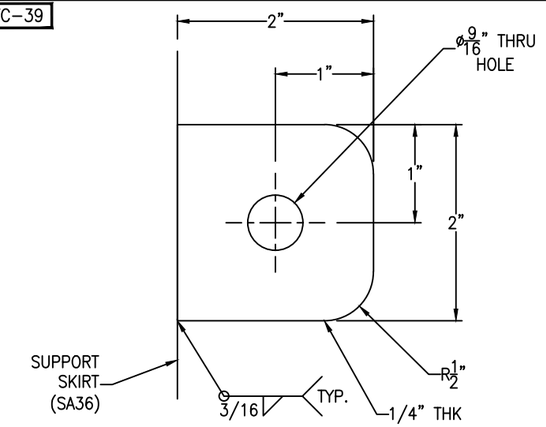

GROUND LUG IS LOCATED @ 45°

GROUND LUG DETAIL (SS304)

(1 REQ'D) SCALE: 1'-0" = 1'-0"

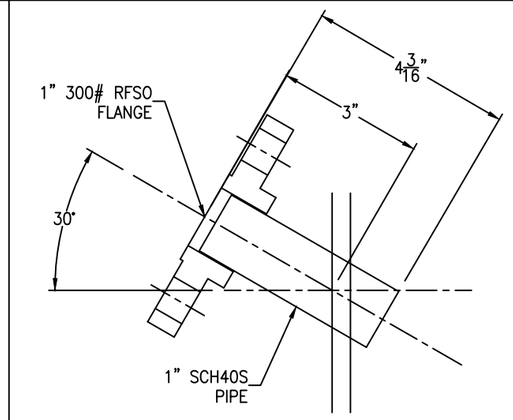

NOZZLE J & K DETAIL

(2 REQ'D) SCALE: 6" = 1'-0"

FC-14

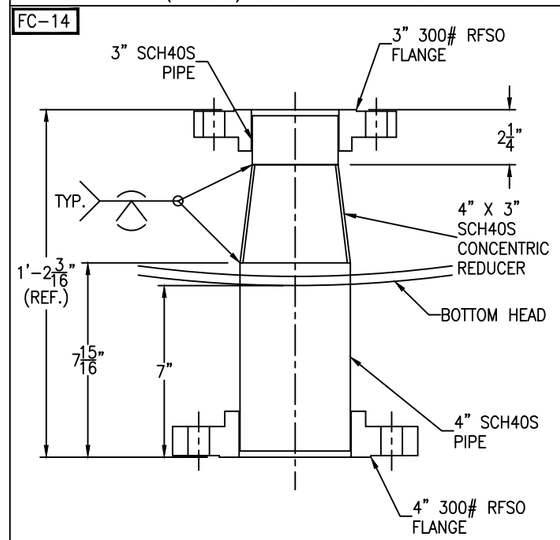

NOZZLE A & T DETAIL

SCALE: 3" = 1'-0"

FC-14

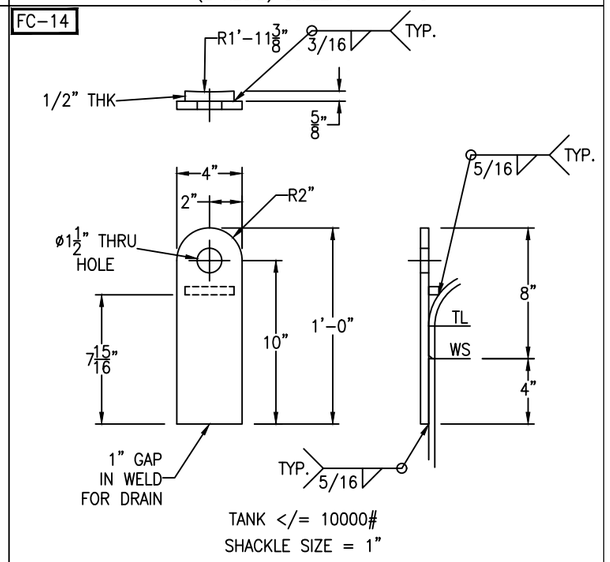

TANK <= 10000#

SHACKLE SIZE = 1"

LIFT LUG DETAIL

(2 REQ'D) SCALE: 2" = 1'-0"

Bolting for blinds

B : (8) 3/4"-10 NC x 4" HH BOLT
(8) 3/4"-10 NC NC HH NUT
(1) 3" 300# RING GASKET X 1/8" (GARLOCK 3000)

G : (8) 3/4"-10 NC x 4 1/2" HH BOLT
(8) 3/4"-10 NC NC HH NUT
(1) 4" 300# RING GASKET X 1/8" (GARLOCK 3000)

REV	D.BY	C.BY	DATE	DESCRIPTION
				AS BUILT
				CERTIFIED
2	AD	RS	10/25/25	APPROVAL REV 2
1	AD	NP	10/10/25	APPROVAL REV 1
0	AD	RS	09/22/25	APPROVAL

⚠ REVISIONS

Savannah Tank & Equipment Corp.
1517 Telfair Road, Savannah, GA 31415
(912) 233-8902

DRAWN BY: AD
CHK'D BY: RS
APPROVED BY: NP
SCALE: 1/2" = 1'-0"

SYMRISE INC.
CARBON UNIT #1
EQUIP. #
CUST. PO #175/4501777859

DRAWING NO.: 092-25-3 SHT 3 OF 6 REV. SET 2

FC-14

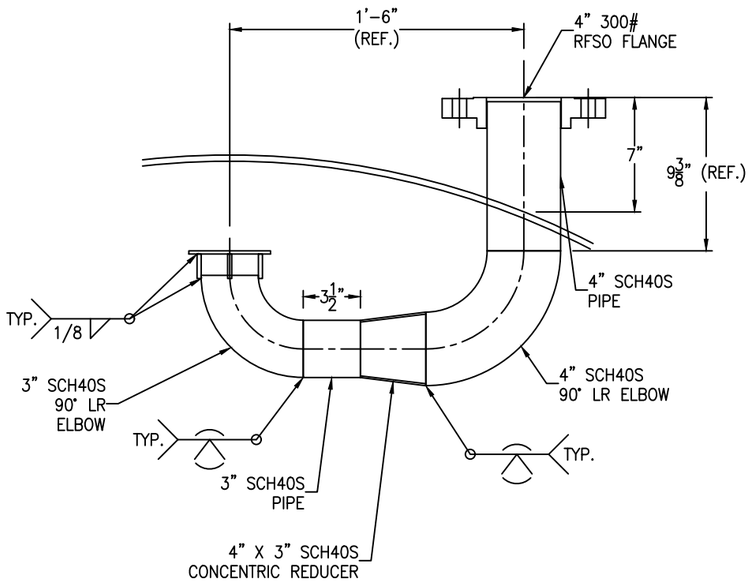

NOZZLE E DETAIL

SCALE: 2" = 1'-0"

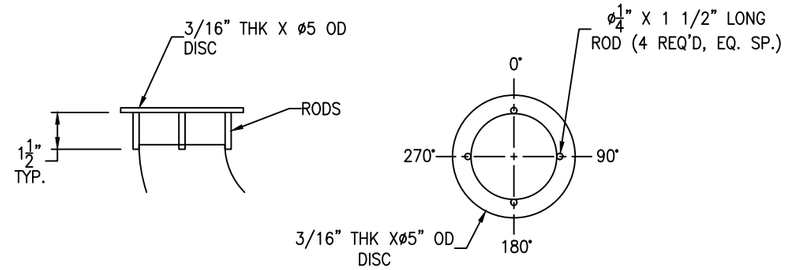

NOZZLE E END CAP ROD ORIENTATION DETAIL

SCALE: 3" = 1'-0"

FC-14

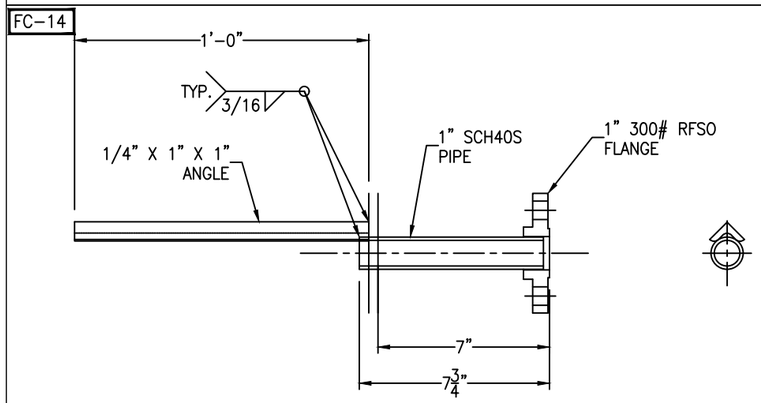

NOZZLE M, N, P DETAIL

(3 REQ'D) SCALE: 3" = 1'-0"

FC-14

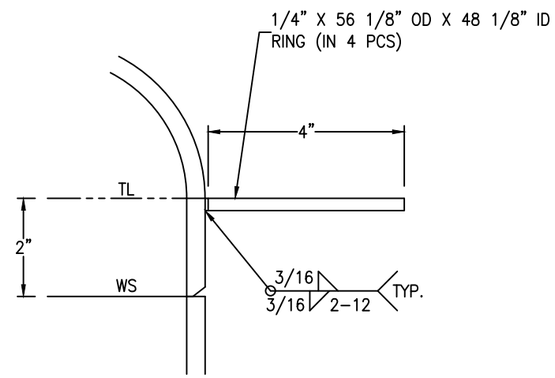

TOP INSULATION RING DETAIL

(1 REQ'D) SCALE: 6" = 1'-0"

FC-14

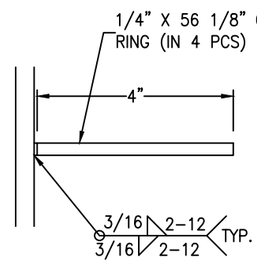

SEE SHEET #1 FOR ELEVATION

SHELL INSULATION RING DETAIL

(6 REQ'D) SCALE: 6" = 1'-0"

FC-14

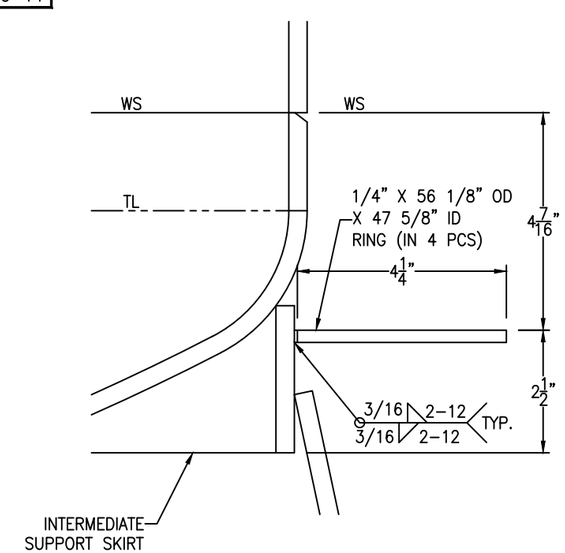

BOTTOM INSULATION RING DETAIL

(1 REQ'D) SCALE: 3/4" = 1'-0"

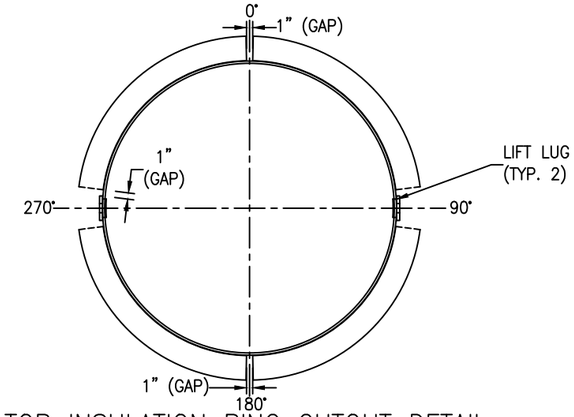

△2 TOP INSULATION RING CUTOUT DETAIL

SCALE: 3/4" = 1'-0"

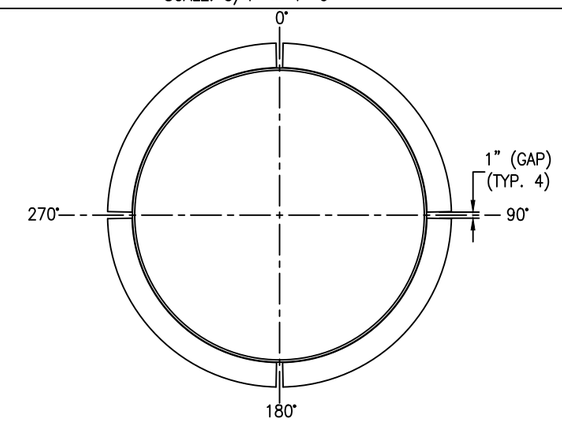

△2 SHELL INSULATION RING CUTOUT DETAIL

(6 REQ'D) SCALE: 3/4" = 1'-0"

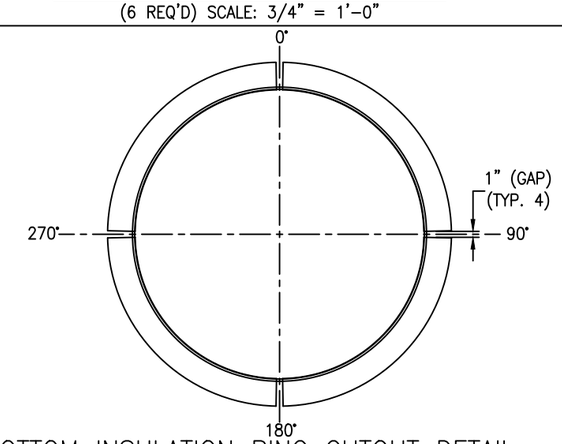

△2 BOTTOM INSULATION RING CUTOUT DETAIL

(1 REQ'D) SCALE: 3/4" = 1'-0"

REV	D.BY	C.BY	DATE	DESCRIPTION
				AS BUILT
				CERTIFIED
2	AD	RS	10/25/25	APPROVAL REV 2
1	AD	NP	10/10/25	APPROVAL REV 1
0	AD	RS	09/22/25	APPROVAL

△1 REVISIONS

Savannah Tank & Equipment Corp.
1517 Telfair Road, Savannah, GA 31415
(912) 233-8902

DRAWN BY: AD
CHK'D BY: RS
APPROVED BY: NP
SCALE: 1/2" = 1'-0"

SYMRISE INC.
CARBON UNIT #1
EQUIP. #
CUST. PO #175/4501777859

DRAWING NO.: 092-25-4 SHT 4 OF 6 REV. SET 2

FC-14

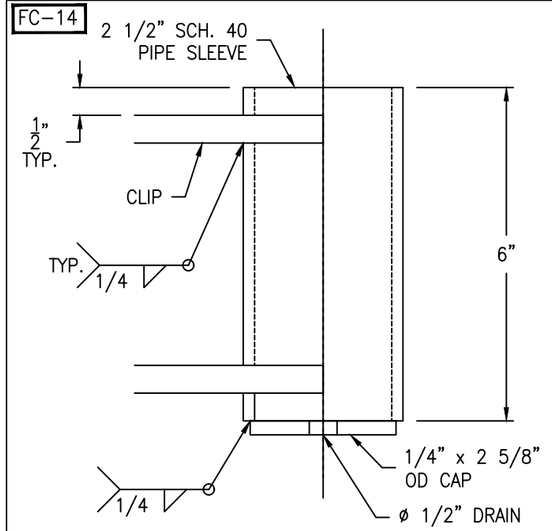

SLEEVE DETAIL

(1 REQ'D) SCALE: 6" = 1'-0"

FC-14

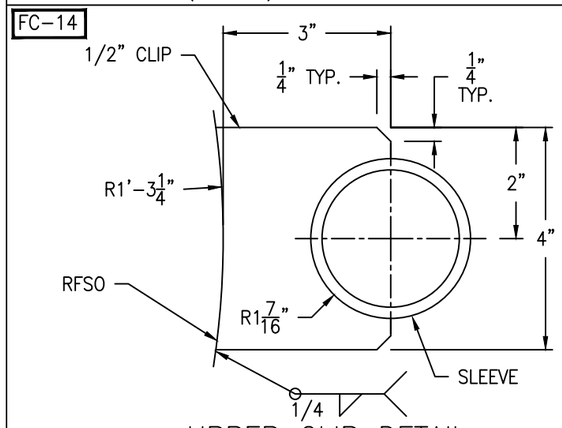

UPPER CLIP DETAIL

(1 REQ'D) SCALE: 6" = 1'-0"

FC-14

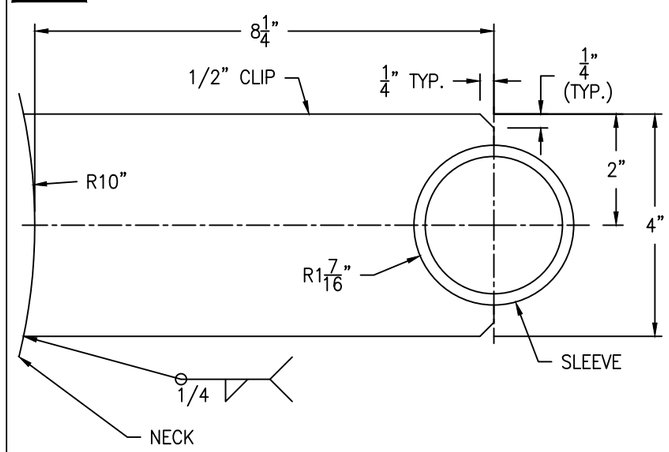

LOWER CLIP DETAIL

(1 REQ'D) SCALE: 6" = 1'-0"

FC-14

Bolting for blind
(24) 1 1/4-7 NC x 8 1/2" FULL THREADED STUD
(48) 1 1/4-7 NC HH NUT
(1) 20" 300# RING GASKET x 1/8" (GARLOCK 3000)

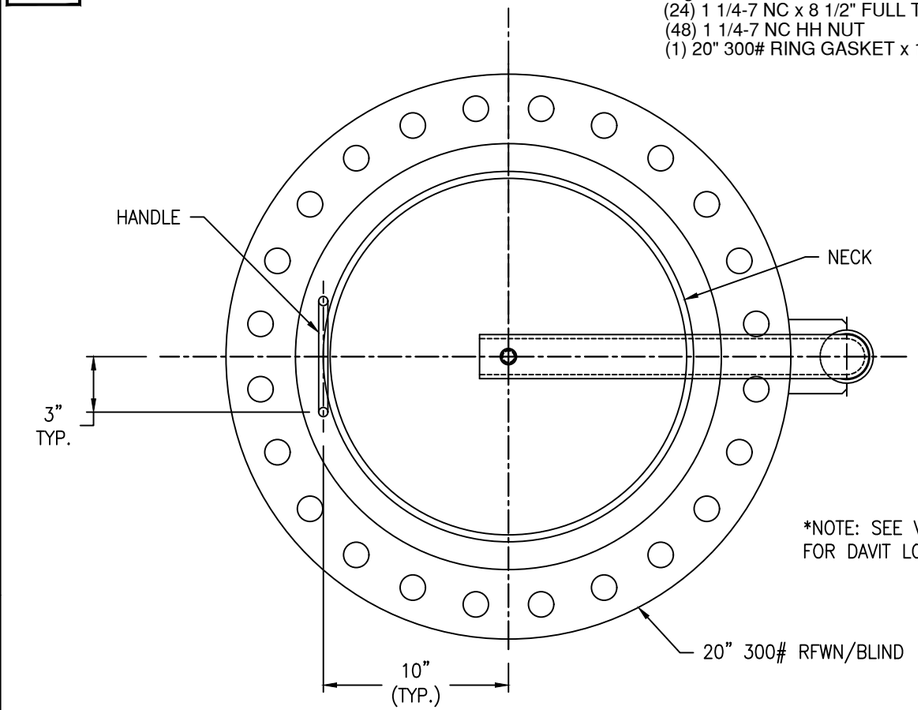

*NOTE: SEE VESSEL ORIENTATION FOR DAVIT LOCATION

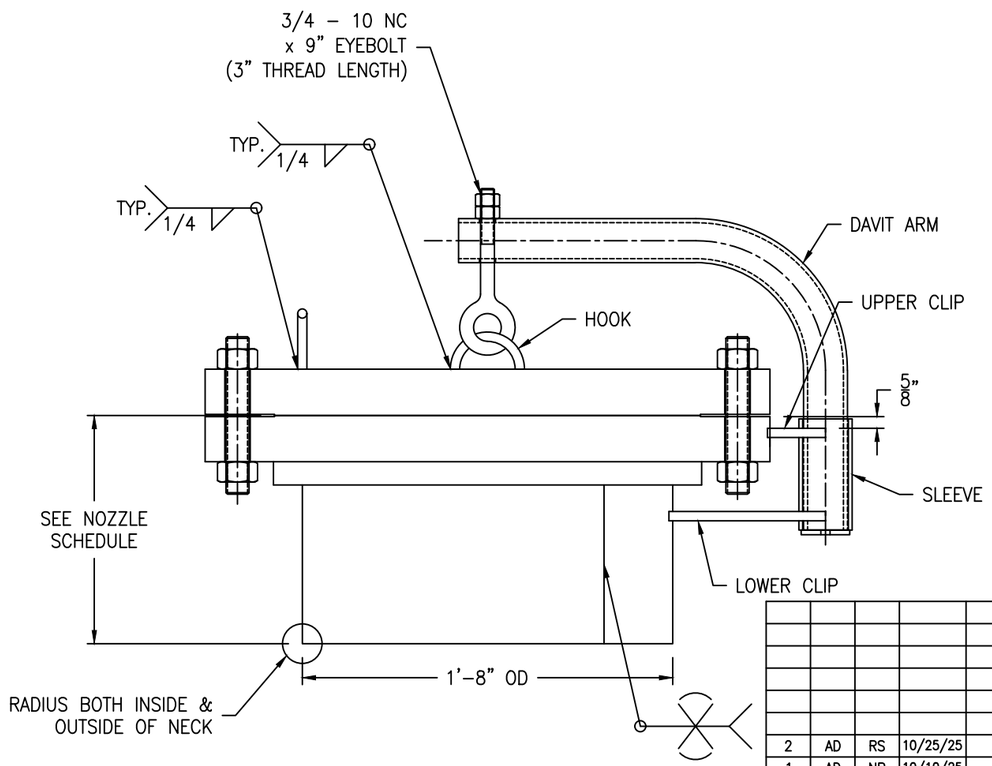

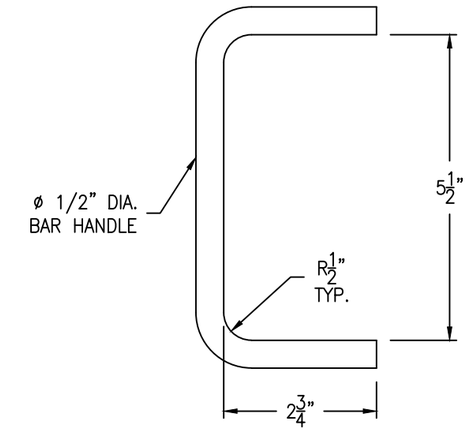

HANDLE DETAIL

(1 REQ'D) SCALE: 6" = 1'-0"

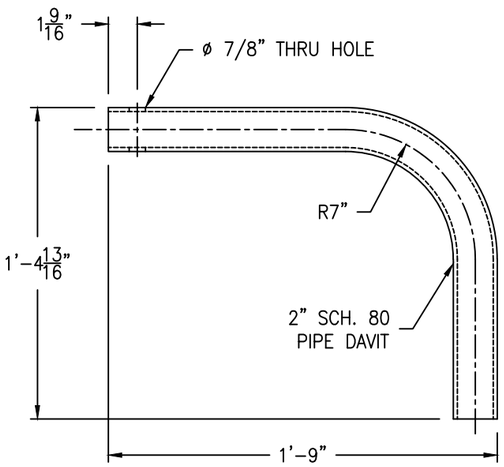

DAVIT ARM DETAIL

(1 REQ'D) SCALE: 2" = 1'-0"

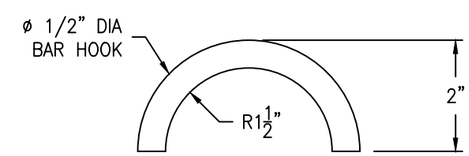

HOOK DETAIL

(1 REQ'D) SCALE: 6" = 1'-0"

REV	D.BY	C.BY	DATE	DESCRIPTION
				AS BUILT
				CERTIFIED
2	AD	RS	10/25/25	APPROVAL REV 2
1	AD	NP	10/10/25	APPROVAL REV 1
0	AD	RS	09/22/25	APPROVAL

REVISIONS

Savannah Tank & Equipment Corp.
1517 Telfair Road, Savannah, GA 31415
(912) 233-8902

DRAWN BY: AD
CHK'D BY: RS
APPROVED BY: NP
SCALE: 1/2" = 1'-0"

SYMRISE INC.
CARBON UNIT #1
EQUIP. #
CUST. PO #175/4501777859

DRAWING NO.: 092-25-5 SHT 5 OF 6 REV. SET 2

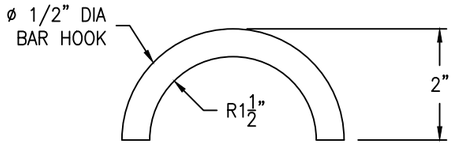

HOOK DETAIL

(1 REQ'D) SCALE: 6" = 1'-0"

FC-14

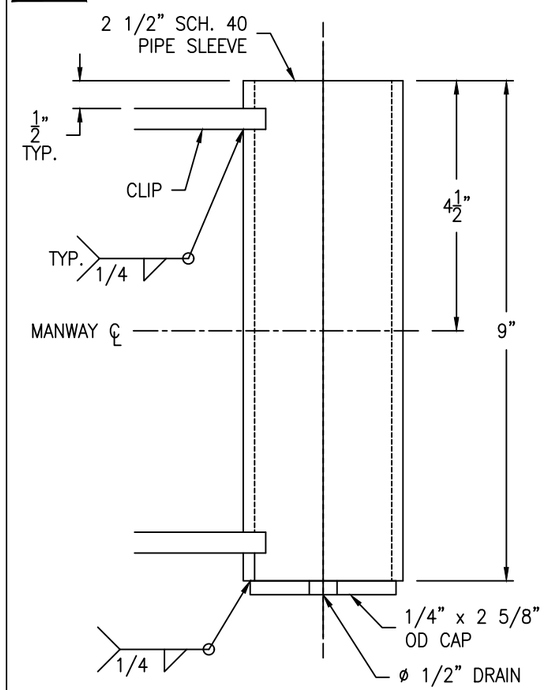

SLEEVE DETAIL

(1 REQ'D) SCALE: 6" = 1'-0"

FC-14

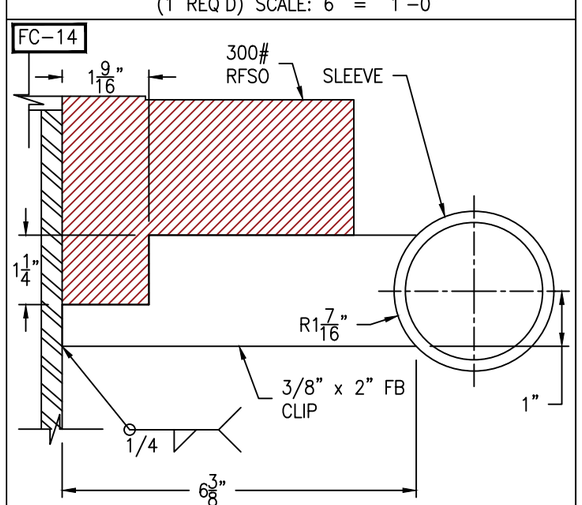

CLIP DETAIL

(2 REQ'D) SCALE: 6" = 1'-0"

FC-14

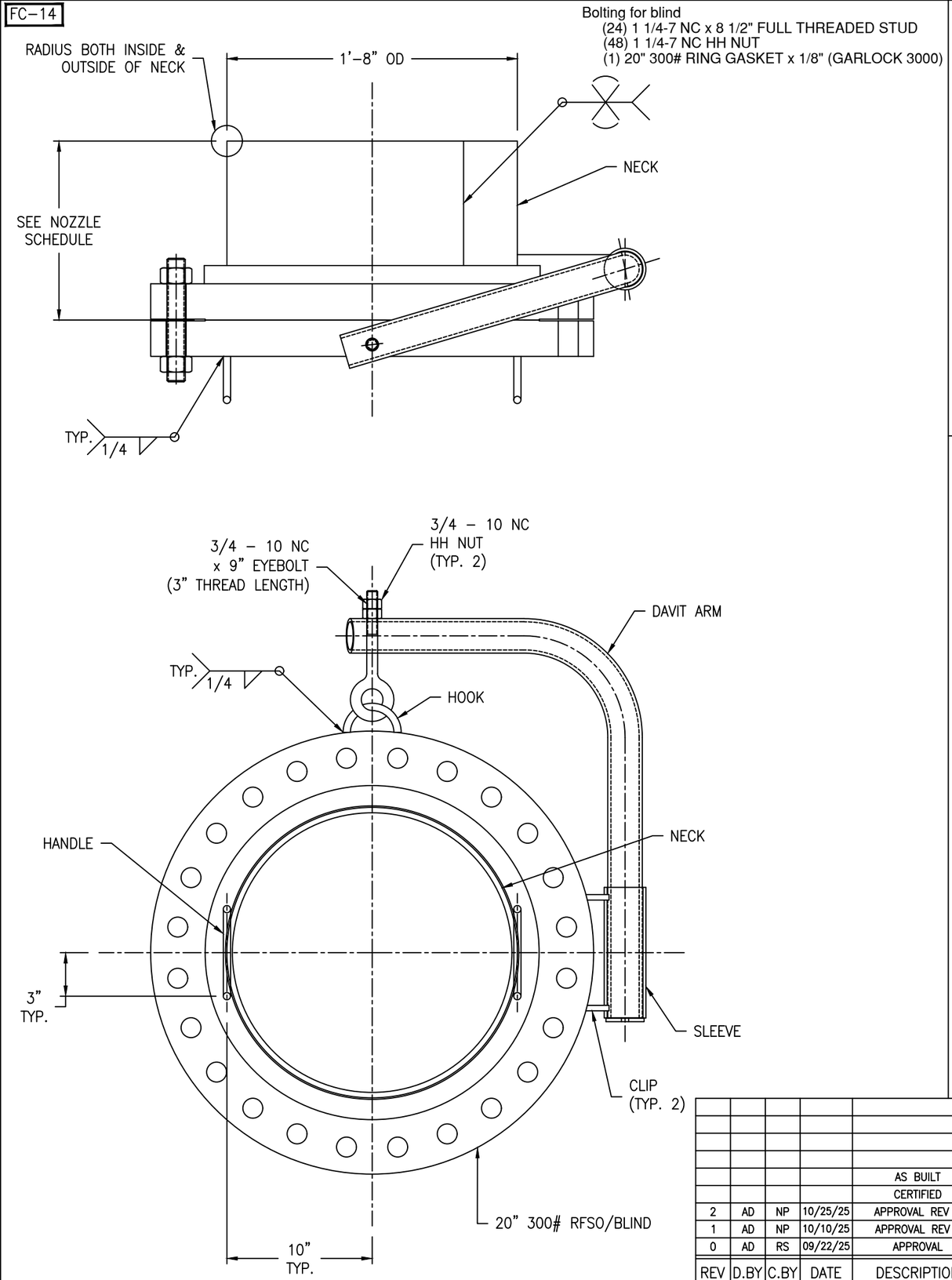

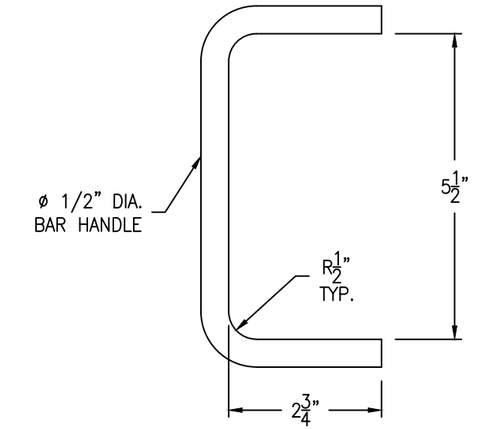

HANDLE DETAIL

(2 REQ'D) SCALE: 6" = 1'-0"

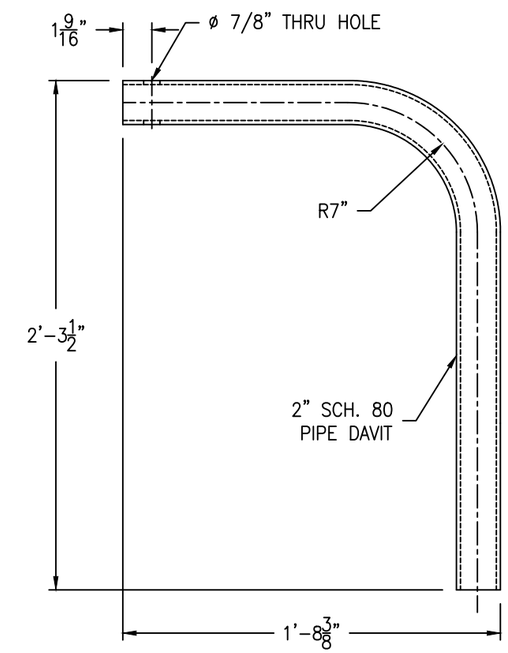

DAVIT ARM DETAIL

(1 REQ'D) SCALE: 2" = 1'-0"

REV	D.BY	C.BY	DATE	DESCRIPTION
				AS BUILT
				CERTIFIED
2	AD	NP	10/25/25	APPROVAL REV 2
1	AD	NP	10/10/25	APPROVAL REV 1
0	AD	RS	09/22/25	APPROVAL

△1 REVISIONS

Savannah Tank & Equipment Corp.
1517 Telfair Road, Savannah, GA 31415
(912) 233-8902

DRAWN BY: AD
CHK'D BY: RS
APPROVED BY: NP
SCALE: 1/2" = 1'-0"

SYMRISE INC.
CARBON UNIT #1
EQUIP. #
CUST. PO #175/4501777859

DRAWING NO.: 092-25-6 SHT 6 OF 6 REV. SET 2